

Sink Phantom Base 30" x 18" (20mm thk)

Kitchen Sinks

Code: 5532 900

AISI 304 Stainless steel
Foster brushed

DETAILS

Series	Phantom Base
Material	AISI 304 stainless steel
Texture	Foster brushed
Dimensions	31 9/16" x 19 9/16"
Standard fittings	Drain Boxed packing
Built-in hole	View technical data sheet
Bowl dimension	30" x 18"
Number of bowls	1 bowl

Waste fitting	3,5" drain

FEATURES

PHANTOM BASE 20 mm	The Phantom BASE sink's bottoms are specifically engineered to be coupled with sinks made out of slabs. The perimetric trough makes for a simple and perfect installation. This version of Phantom BASE is meant for slabs of 20mm thickness.
PHANTOM BASE WITHOUT WELDING	The steel bottom Phantom BASE solves the problem of water draining of slab sinks, because the slope built into the moulded bottom ensures perfect draining. The radius and sloped profile of Phantom BASE guarantee great practicality and hygiene in everyday cleaning.
High thickness	1.5 mm thick steel. A significant thickness, which guarantees the maximum sturdiness and durability.
Small radius	Bowls with squared shapes with a modern design and an increased capacity, for a minimal aesthetics connected with an extreme practicity.
Basket 3,5" waste fitting	The drain is equipped with a large 3.5" drain, with the practical basket cap that prevents the discharge of solid parts.

TECHNICAL DATA

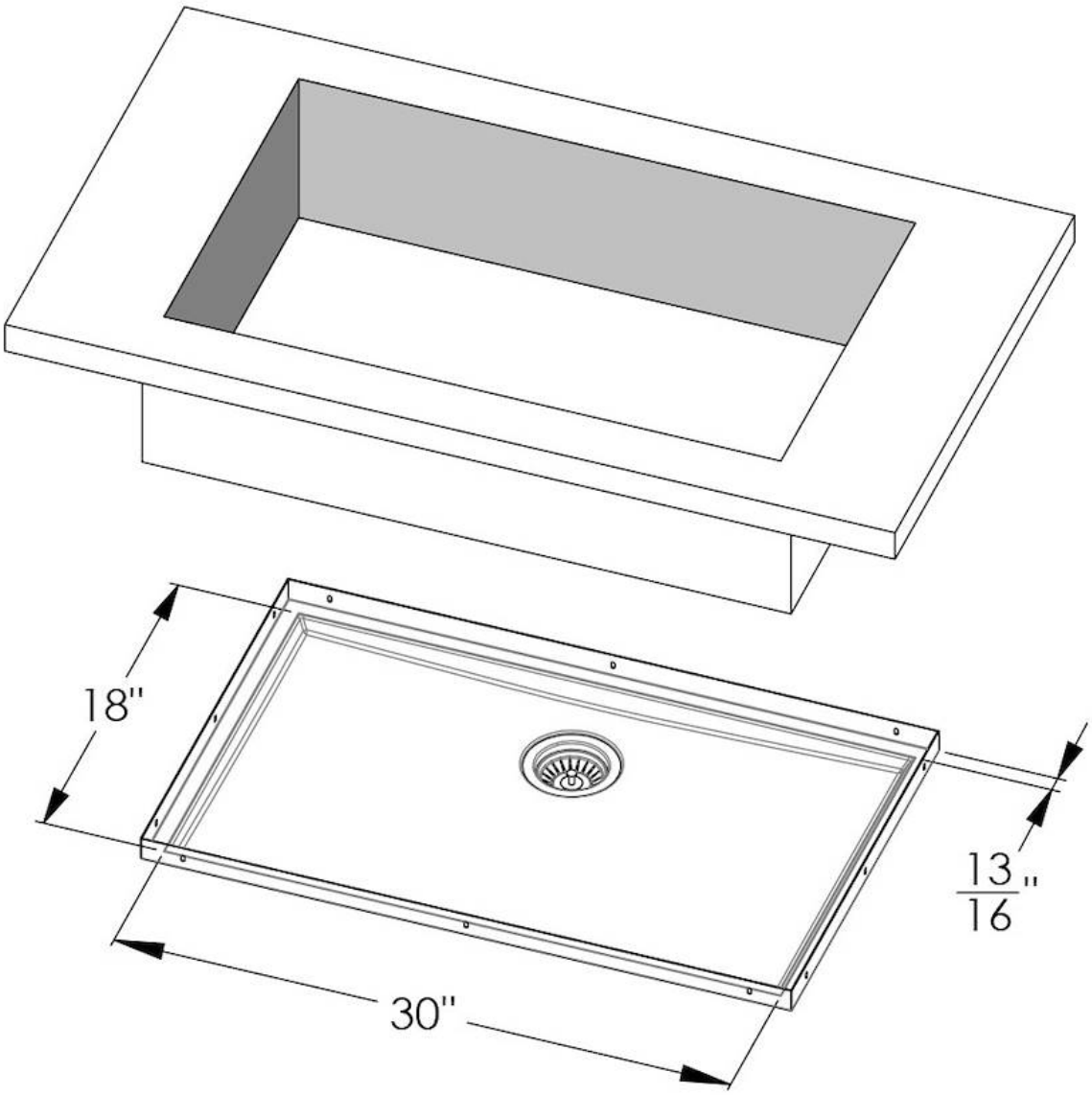
18"
30"
13/16"

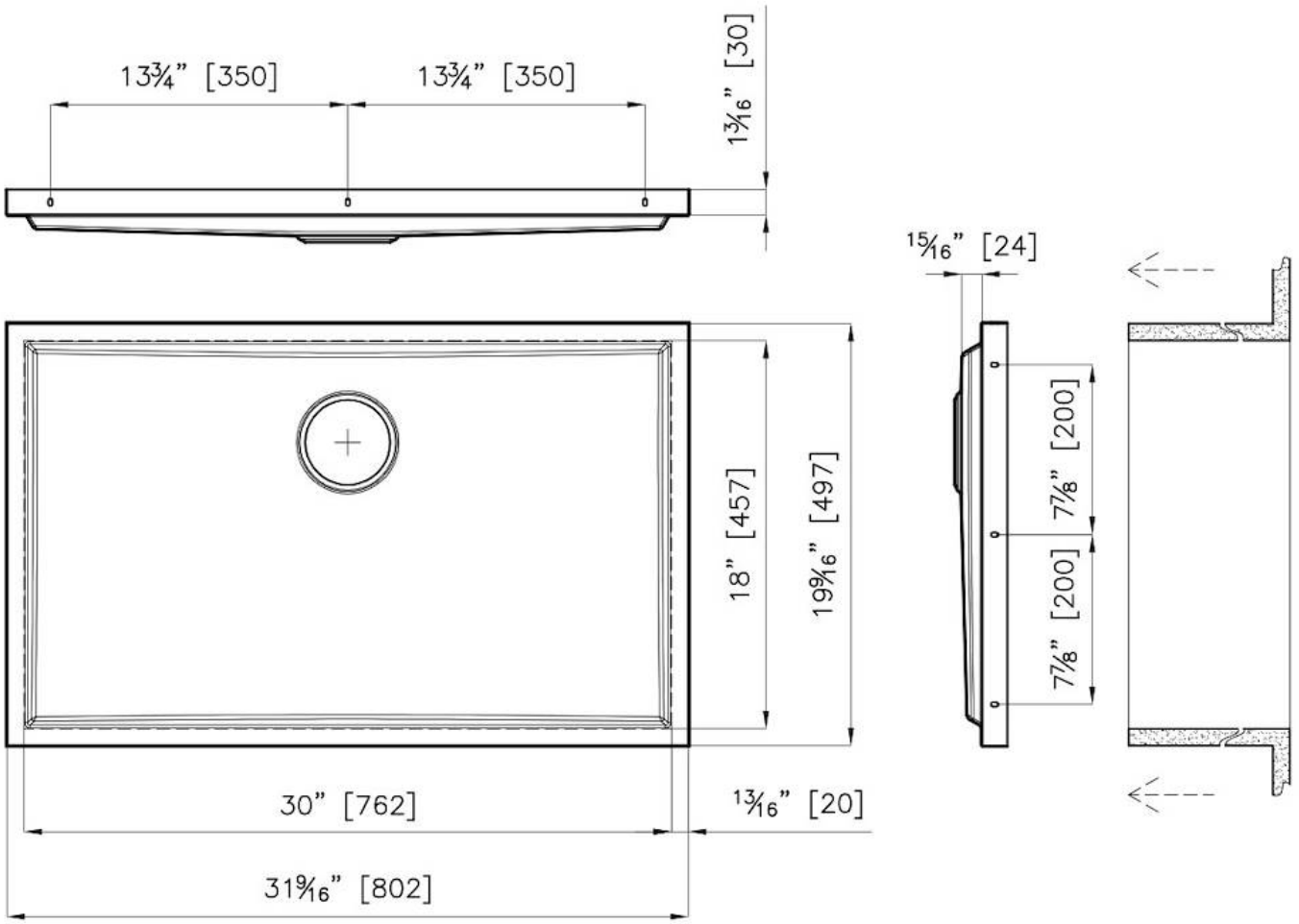
13¾" [350]
13¾" [350]
1³⁄₁₆" [30]
15⁄16" [24]
18" [457]
19⁹⁄₁₆" [497]
7⅞" [200]
7⅞" [200]
30" [762]
1³⁄₁₆" [20]
31⁹⁄₁₆" [802]

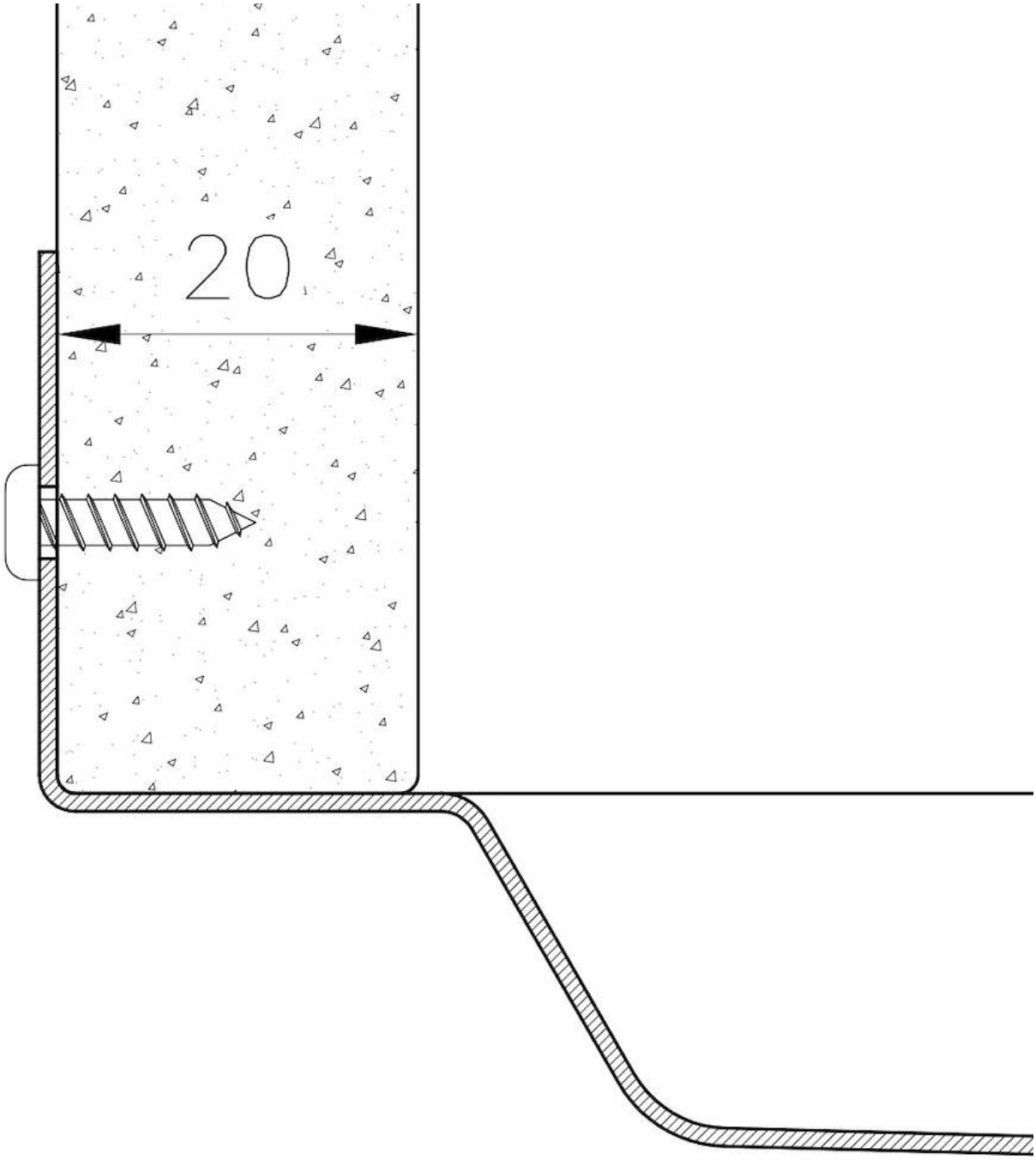

GALLERY



OPTIONAL ACCESSORIES



Black grid
8100 619



Chopping board
8644 034



Stainless steel plate rack
8100 154
* only in combination with the accessory 8644 034



Stainless steel perforated pan
8154 000
* only in combination with the accessory 8644 034



Twin Chopping Board
8644 102

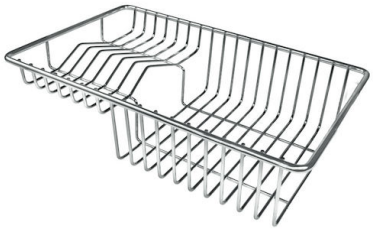

Stainless Steel dishes holder
8100 303
* only in combination with the accessory 8644 102



Stainless steel perforated pan
8151 000
* only in combination with the accessory 8644 102



Grating kit complete with ring support and food collection tray
8159 101
* only in combination with the accessory 8644 102



Waste disposer throat
8669 043

RECOMMENDED PAIRINGS



Faucet Capri
8467 005



Faucet Salina
8487 005



Milano Cooktop 4 burners inLine
7640 900



Milano Induction Cooktop 5 Plate
7390 945